LAKE RABUN BLUFFS

Water System As-built Drawings

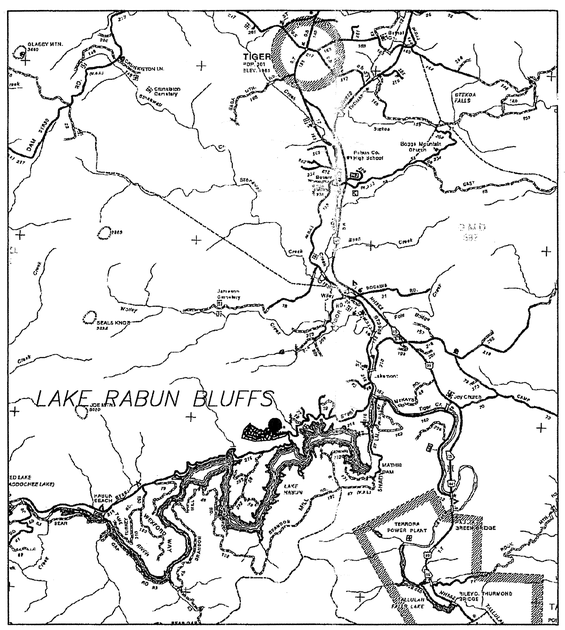

LOCATION MAP

NOT TO SCALE

Index of Drawings

1 COVER SHEET
2 WATERLINE PLAN
3 SUPPLY WELL PLAN & DETAILS
4 WATERLINE DETAILS

January 10, 2005

PROJECT LOCATION AND DESCRIPTION

The site is located off Seed Lake Road in Rabun County, Georgia, south of the City of Tiger. The project consists of the as-built construction of waterlines and supply well(s) to serve a 36 lot residential subdivision.

The water distribution system will consist of approximately 4,982 linear feet of 2" SDR21, Slip jt. PVC waterline.

PROPERTY OWNER:
LAKE RABUN BLUFFS PROPERTY OWNERS ASSOCIATION
c/o GEORGE WOELPER
2565 WELLINGTON DRIVE
MARIETTA, GA 30062
(404) 861-3954

24 HOUR CONTACT:
GEORGE WEOLPER
(404) 861-3954

THE ENGINEERING GROUP
INCORPORATED
P.O. BOX 81338 • CONYERS, GEORGIA 30013
(770) 860-9818 FAX (770) 860-0553

1-10-05

Michael P. Bledsoe, P.E. Date

GEORGIA REGISTERED No. 26243 PROFESSIONAL ENGINEER MICHAEL P. BLEDSOE

THIS LINE _____ IS ONE INCH LONG WHEN PLOTTED FULL SCALE

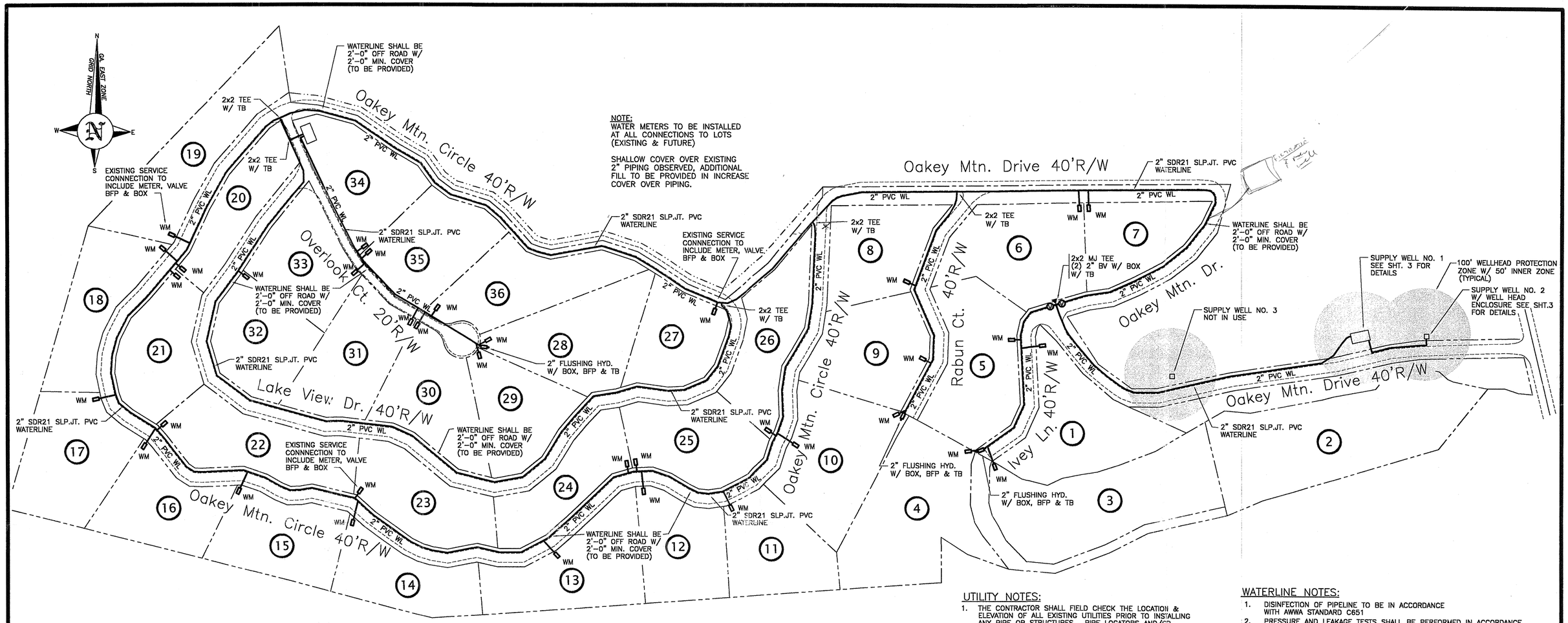

NOTE:
WATER METERS TO BE INSTALLED AT ALL CONNECTIONS TO LOTS (EXISTING & FUTURE)

SHALLOW COVER OVER EXISTING 2" PIPING OBSERVED, ADDITIONAL FILL TO BE PROVIDED IN INCREASE COVER OVER PIPING.

WATERLINE PLAN

SCALE: 1" = 100'

100 0 100 200
GRAPHIC SCALE 1" =100'

LEGEND

- BLOW-OFF
- CONCRETE COLLAR
- CONCRETE THRUST BLOCK (TB)
- DOUBLE SERVICE
- FHA — FIRE HYDRANT ASSEMBLY (FHA)
- GATE VALVE (GV)
- MJ PLUG
- SINGLE SERVICE

GENERAL NOTES:

1. THE LOCATIONS OF EXISTING UTILITIES, SUCH AS WATERMAINS, SEWER LINES, GAS LINES, ETC., AS SHOWN ON THE PLANS, HAVE BEEN DETERMINED FROM THE BEST AVAILABLE INFORMATION AND GIVEN FOR THE CONVENIENCE OF THE CONTRACTOR. HOWEVER, THE ENGINEER AND THE OWNER DO NOT ASSUME ANY RESPONSIBILITY FOR THE ACCURACY OF THE LOCATIONS SHOWN. IT SHALL BE THE CONTRACTOR'S RESPONSIBILITY TO CONTACT ALL UTILITY COMPANIES SEVENTY-TWO (72) HOURS PRIOR TO COMMENCEMENT OF ANY CONSTRUCTION ACTIVITY AND HAVE THIER FACILITIES LOCATED IN THE FIELD.
2. ALL PRIVATE AND PUBLIC PROPERTY, WHICH IS OFF-SITE OR WITHIN EASEMENTS ON-SITE, THAT IS EFFECTED BY THIS CONTRACT SHALL BE RESTORED BY THE CONTRACTOR TO AN IMPROVED CONDITION. THE COST TO BE INCIDENTAL TO OTHER CONSTRUCTION AND NO EXTRA COMPENSATION TO BE ALLOWED UNLESS SPECIFICALLY EXEMPTED ON THE PLANS.
3. IT IS THE CONTRACTORS RESPONSIBILITY TO NOTIFY THE OWNER'S RESPRESENTATIVE OF ANY DISCREPANICIES BETWEEN THE PLANS AND ACTUAL FIELD CONDITIONS. THE CONTRACTOR SHALL ADHERE TO COUNTY STANDARDS DURING THE CONSTRUCITON OF THIS PROJECT.
4. EQUIPMENT AND MATERIALS SHALL BE STORED IN AREAS DESIGNATED BY THE OWNER'S REPRESENTATIVE. CONTRUCTION AND STORAGE SHALL BE KEPT NEAT AND CLEAN AT ALL TIMES.

UTILITY NOTES:

1. THE CONTRACTOR SHALL FIELD CHECK THE LOCATION & ELEVATION OF ALL EXISTING UTILITIES PRIOR TO INSTALLING ANY PIPE OR STRUCTURES. PIPE LOCATORS AND/CR MANUAL EXCAVATION SHALL BE USED TO LOCATE EXISTING UTILITIES OR OBSTRUCTIONS.
2. THE CONTRACTOR WARRANTS THAT HIS EMPLOYEES, AGENTS, AND SUBCONTRACTORS POSSESS THE EXPERIENCE, KNOWLEDGE, AND CHARACTER NECESSARY TO QUALIFY THEN INDIVIDUAL FOR THE PARTICULAR CONSTRUCTION TECHNIQUES THEY PERFORM IN CONNECTION WITH THE TASKS TO BE PERFORMED UNDER THIS CONTRACT. THE CONTRACTOR SHALL INSURE THAT ALL CONSTRUCTION BE PERFORMED IN STRICT COMPLIANCE WITH ALL OSHA (OCCUPATIONAL SAFTEY AND HEALTH ADMINISTRATION), STATE, AND LOCAL HEALTH AND SAFTEY CODES.
3. THE CONTRACTOR IS RESPONSIBLE FOR FURNISHING AND DELIVERING ALL PIPE, FITTINGS, VALVES, NUTS, BOLTS, COUPLINGS AND CONCRETE MANHOLES WITH COVERS; THE CONTRACTOR IS ALSO RESPONSIBLE FOR STORAGE, MAINTENANCE PROTECTION, AND INSTALLATION OF ALL MATERIALS NECESSARY TO PROVIDE A COMPLETE, OPERABLE AND TROUBLE FREE SYSTEM. THE MATERIALS TO BE SUPPLIED BY THE CONTRACTOR INCLUDE, BUT ARE NOT LIMITED TO, CONCRETE, GRAVEL, SOD, GRASSES, ALL SEDIMENT AND EROSION CONTROL MEASURES, TIE RODS, REINFORCING AND OTHER MISCELLANEOUS ITEMS AND EQUIPMENT NECESSARY FOR A COMPLETE INSTALLATION.
4. THE CONTRACTOR IS RESPONSIBLE FOR PROVIDING TEMPORARY FACILITIES AS REQUIRED TO ISOLATE PIPELINES INSTALLED UNDER THIS CONTRACT FOR THE PERFORMANCE OF TESTING.
5. ALL DISTURBED OR CLEARED & GRUBBED AREAS SHALL BE IMMEDIATELY PROTECTED AND FINISHED BY SEEDING IN ACCORDANCE WITH THE APPROVED SPECIFICATIONS OF THE EROSION AND SEDIMENT CONTROL PLAN. THE DISTURBED AREA RESULTING FROM UTILITY CONTRUCTION SHALL BE SEEDED IN 750 FT INCREMENTS.
6. ALL DISTURBED DRAINAGE SWALES SHALL BE SODDED IMMEDIATELY UPON COMPLETION OF CONSTRUCTION WITHIN THE IMMEDIATE AREA.
7. THE LIMITS OF CLEARING & GRUBBING SHALL BE TEN (10) FEET FROM EACH SIDE OF THE CENTERLINE OF THE PIPELINE UNLESS OTHERWISE INDICATED.
8. THE CONTRACTOR IS NOT TO STOCKPILE EXCAVATED MATERIAL WITHIN FORESTED AREAS.

WATERLINE NOTES:

1. DISINFECTION OF PIPELINE TO BE IN ACCORDANCE WITH AWWA STANDARD C651
2. PRESSURE AND LEAKAGE TESTS SHALL BE PERFORMED IN ACCORDANCE WITH THE LATEST EDITION OF AWWA STD. C600 AND/OR C605.
3. ALL MATERIALS THAT COME INTO CONTACT WITH THE DRINKING WATER DURING IT TREATMENT, STORAGE, TRANSMISSION OR DISTRIBUTION SHALL NOT ADVERSELY AFFECT DRINKING WATER QUALITY AND PUBLIC HEALTH AND MUST BE CERTIFIED FOR CONFORMANCE WITH AMERICAN NATIONAI STANDARDS INSTITUTE/ NATIONAL SANITATION FOUNDAITON STANDARD 61 (ANSI/NSF STD. 61)
4. THE PIPE, FITTINGS, VALVES AND FIRE HYDRANTS USED ON THIS PROJECT SHALL CONFORM WITH THE LATEST AWWA STANDARDS. IN THE ABSENCE OF SUCH STANDARDS, PIPE MEETING APPLICABLE ASTM AND ANSI CRITERIAL AND ACCEPTABLE TO THE DIVISION MAY BE SELECTED.
5. DUCTILE IRON AND CAST IRON PIPE SHALL MEET THE LATEST EDITION OF ANSI/AWWA STANDARD C106 OR C108 FOR CAST IRON PIPE AND C151 FOR DUCTILE IRON PIPE.
6. ALL FITTINGS SHALL BE DUCTILE IRON AND SHALL CONFORM TO THE LATEST EDITION OF AWWA STANDARD C110 OR C153
7. ONLY PVC PIPE MEETING THE STANDARDS SET FORTH IN AWWA C-900 SHALL BE ACCEPTABLE FOR THOSE WORKING PRESSURES AS DESIGNATED BY CLASS.
8. ALL PIPE SHALL MEET ALL THE REQUIREMENTS SET FORTH IN ASTM STANDARD D 2241. THE PIPE MUST BEAR THE SEAL OF APPROVAL FOR POTABLE WATER USE AND FOR CONFORMANCE WITH NSF STANDARD 61.
9. SOLVENT CEMENTED JOINTS ARE NOT ALLOWED FOR BURIED PIPES.
10. CONTRACTOR SHALL PROVIDE 12 GAUGE (MIN.) TRACER WIRE WITH ALL PVC PIPE.
11. WATERLINE SHALL BE INSTALLED A MINIMUM OF 4'-0" BELOW GRADE AND/OR EDGE OF PAVEMENT, WHICH EVER IS GREATER.
12. ALL ROADWAY CROSSINGS, FIRE HYDRANT LEADS AND CULVERT, DRAIN AND OTHER UTILITY LINE CROSSINGS COMING WITHIN 10' OF THE LINE, SHALL BE MADE USING DUCTILE IRON PIPE.
13. ALL MATERIALS AND CONSTRUCTION PROCEDURES SHALL BE IN ACCORDANCE WITH THE "MINIMUM STANDARDS FOR PUBLIC WATER SYSTEMS, MAY 2000".
14. ALL FITTINGS, TEES, BENDS, PLUGS, ETC. SHALL BE RESTRAINED WITH CONCRETE THRUST BLOCKS OR OTHER APPROVED RESTRAINED JOINT METHOD.

THIS LINE _____ IS ONE INCH LONG WHEN PLOTTED FULL SCALE

NO.	DATE	DESCRIPTION OF REVISION
0	01-10-05	INITIAL ISSUE

UTILITIES PROTECTION CENTER, INC. CALL BEFORE YOU DIG 1-800-282-7411

LAKE RABUN BLUFFS
2565 Wellington Drive
Marietta, Georgia 30062

THE ENGINEERING GROUP
INCORPORATED

GEORGIA REGISTERED No. 26246 PROFESSIONAL ENGINEER MICHAEL P. BLEDSOE
1.10.05

AS-BUILT WATERLINE PLAN

Lake Rabun Bluffs Water System As-built Drawings

DESIGNED: MPB	CHECKED: MPB	DATE: JAN. 10, 2005	2	0
DRAWN: MPB	JOB NO. 512.0401.01	SCALE: AS SHOWN	SHEET	REV

WELL NO. 2

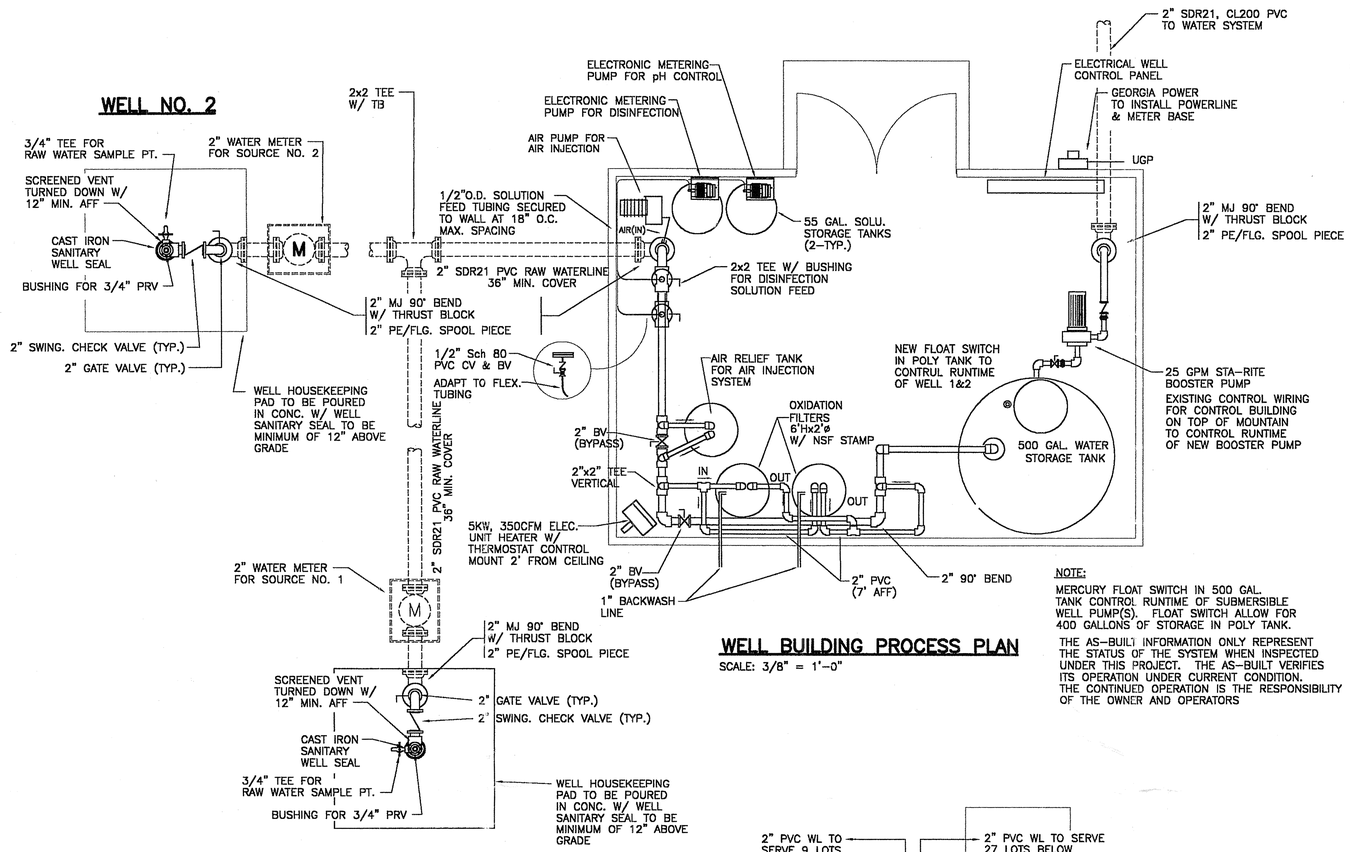

WELL NO. 1

WELL BUILDING PROCESS PLAN

SCALE: 3/8" = 1'-0"

NOTE:
MERCURY FLOAT SWITCH IN 500 GAL. TANK CONTROL RUNTIME OF SUBMERSIBLE WELL PUMP(S). FLOAT SWITCH ALLOW FOR 400 GALLONS OF STORAGE IN POLY TANK.

THE AS-BUILT INFORMATION ONLY REPRESENT THE STATUS OF THE SYSTEM WHEN INSPECTED UNDER THIS PROJECT. THE AS-BUILT VERIFIES ITS OPERATION UNDER CURRENT CONDITION. THE CONTINUED OPERATION IS THE RESPONSIBILITY OF THE OWNER AND OPERATORS

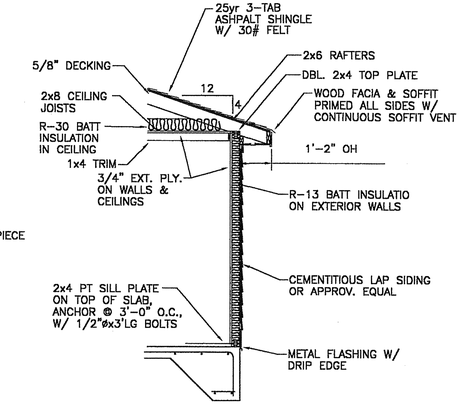

TYPICAL BUILDING WALL SECTION

SCALE: 3/8" = 1'-0"

NOTE:
PROVIDE 16"x16" REMOVABLE PANEL DIRECTLY OVER WELL CASING TO ALLOW FOR REMOVAL OF WELL PUMP & PIPING FROM THE OUTSIDE OF THE BUILDING

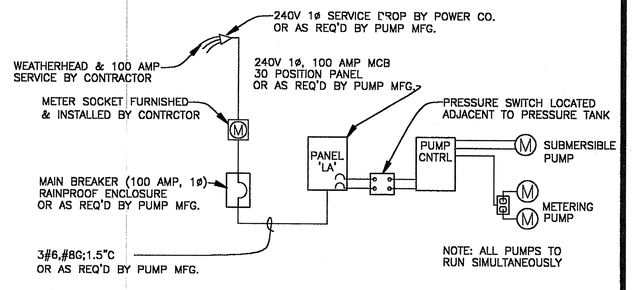

TYPICAL RISER DIAGRAM

NO SCALE

ELECTRICAL DESIGN TO BE CONFIRMED AFTER WELL PUMP IS SELECTED. PROVIDE CONTACTS TO LIMIT CLORINATOR PUMP TO RUN ONLY WHEN WELL PUMP IS RUNNING.

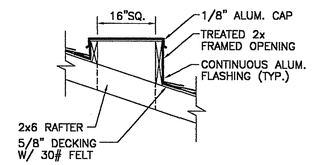

REMOVABLE PANEL DETAIL

NO SCALE

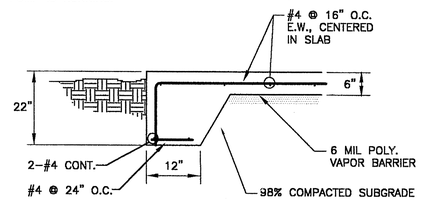

TURNDOWN FOUNDATION & SLAB

NOT-TO-SCALE

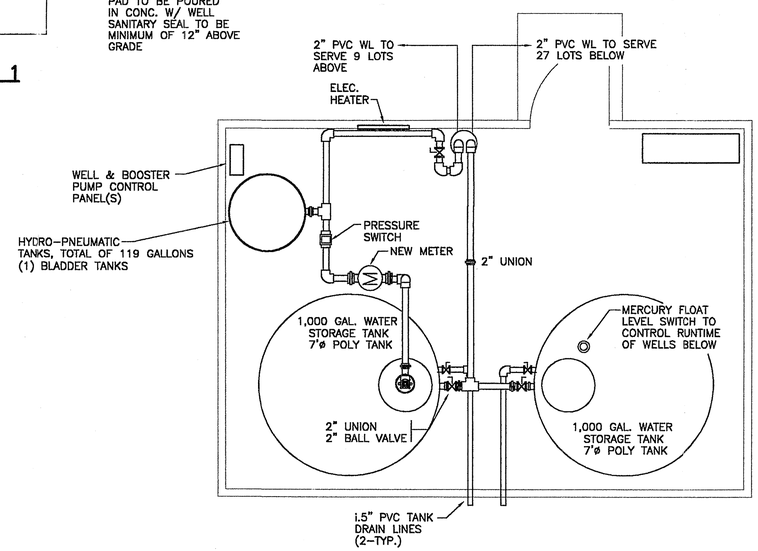

STORAGE/CONTROL BUILDING PLAN

SCALE: 3/8" = 1'-0"

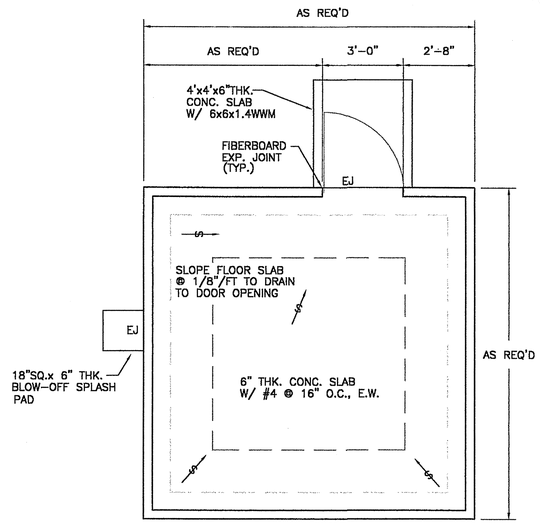

WELL/CONTROL BUILDING PLAN

SCALE: 3/8" = 1'-0"

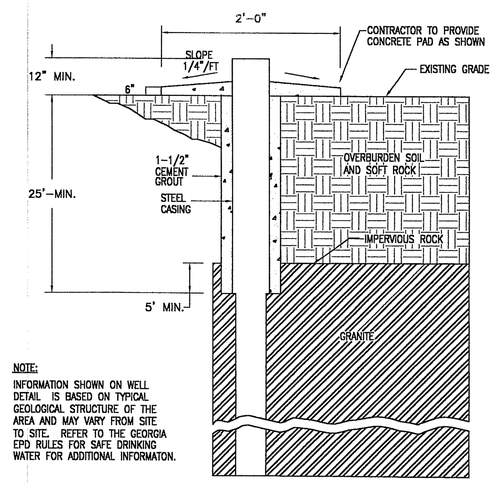

NOTE:
INFORMATION SHOWN ON WELL DETAIL IS BASED ON TYPICAL GEOLOGICAL STRUCTURE OF THE AREA AND MAY VARY FROM SITE TO SITE. REFER TO THE GEORGIA EPD RULES FOR SAFE DRINKING WATER FOR ADDITIONAL INFORMATON.

FINISHED WELL DETAIL

NOT-TO-SCALE

CONTRACTOR TO FURNISH WELL DRILLING LOG, WATER ANALYSIS IN ACCORDANCE WITH EPD REQUIREMENTS AND 24HR. PUMP DOWN TEST.

THIS LINE ——— IS ONE INCH LONG WHEN PLOTTED FULL SCALE

NO.	DATE	DESCRIPTION OF REVISION
0	01-10-05	INITIAL ISSUE

BELLSOUTH PROTECTION SERVICE INC. DIG CALL BEFORE YOU DIG 1-800-282-7411

LAKE RABUN BLUFFS
2565 Wellington Drive
Marietta, Georgia 30062

THE ENGINEERING GROUP INCORPORATED

GEORGIA REGISTERED PROFESSIONAL ENGINEER No. 16243 MICHAEL P. BLEDSOE 1.10.05

SUPPLY WELL PLAN & DETAILS

Lake Rabun Bluffs
Water System As-built Drawings

DESIGNED: MPB	CHECKED: MPB	DATE: JAN. 10, 2005	3	0
DRAWN: MPB	JOB NO. 512.0401.01	SCALE: AS SHOWN	SHEET	REV

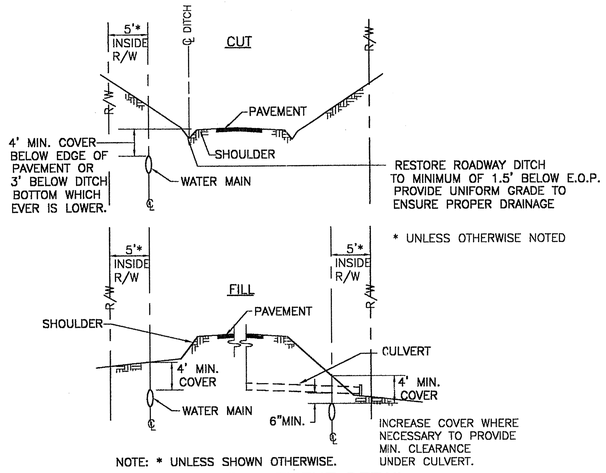

NOTE: * UNLESS SHOWN OTHERWISE.

TYPICAL MAIN PLACEMENT DETAIL ALONG ROADWAYS

N.T.S.

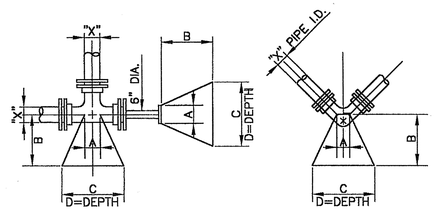

200 PSI TEST PRESSURE
2000 PSF SOIL BEARING

BLOCKING DIMENSIONS		X*	A	B	C	D
DEAD END & TEES		10"	1'-0"	2'-6"	4'-0"	2'-6"
		8"	0'-10"	2'-3"	3'-3"	2'-0"
		6"	0'-8"	1'-6"	2'-6"	1'-6"
BENDS	90°	10"	1'-0"	3'-6"	5'-0"	2'-9"
		8"	0'-10"	2'-9"	4'-0"	2'-3"
		6"	0'-8"	2'-0"	3'-0"	1'-9"
	45°	10"	1'-0"	1'-9"	3'-0"	2'-6"
		8"	0'-10"	1'-6"	2'-6"	2'-0"
		6"	0'-8"	1'-3"	2'-0"	1'-6"
	1/2°	10"	1'-0"	1'-4"	2'-6"	1'-6"
		8"	0'-10"	1'-0"	2'-0"	1'-3"
		6"	0'-8"	0'-9"	1'-6"	1'-0"
	1/4°	10"	1'-0"	0'-6"	1'-6"	1'-3"
		8"	0'-10"	0'-6"	1'-4"	1'-0"
		6"	0'-8"	0'-6"	1'-0"	0'-9"

X* = DIAMETER OF PIPE TO BE BLOCKED
NOTE: FOR PIPE SIZES LESS THAN 6" DIAMETER, USE DIMENSIONS FOR 6" FITTINGS AS MINIMUM.

TYPICAL BLOCKING DETAIL

N.T.S.

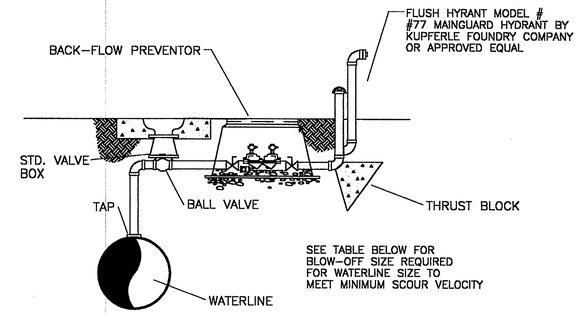

BLOW-OFF TAP SIZES FOR FLUSHING				
MAIN SIZE (DIA. IN.)	STATIC PRESSURE (PSI)			GPM TO PRO-DUCE 2.5 FT/S
	25-49	50-74	75-100	
2"	2"	2"	2"	25
4"	2"	2"	2"	100
6"	FHA	2"	2"	220
8"	FHA	FHA	FHA	390

FHA - FIRE HYDRANT ASSEMBLY (NIC)
2" IS THE MINIMUM ALLOWABLE SIZE OF NEW BLOWOFF

FLUSH HYDRANT DETAIL

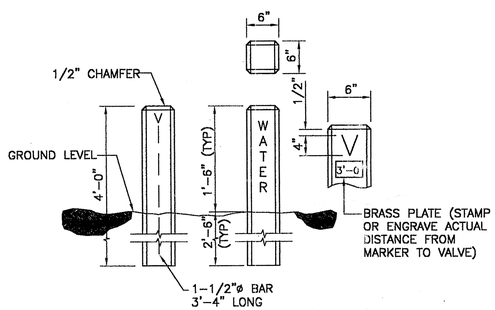

DETAILS OF WATER VALVE MARKER

N.T.S.

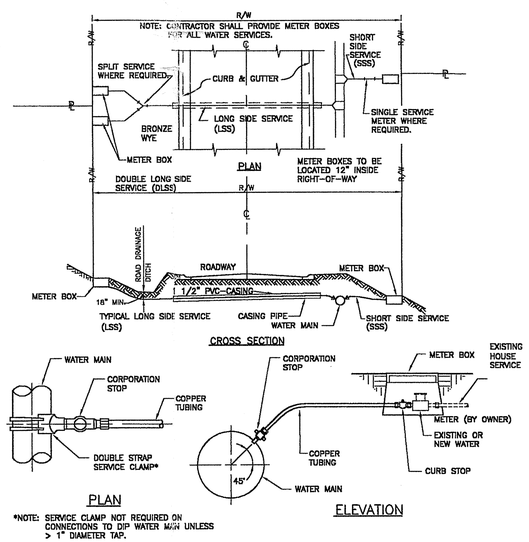

*NOTE: SERVICE CLAMP NOT REQUIRED ON CONNECTIONS TO DIP WATER MAIN UNLESS > 1" DIAMETER TAP.

TYPICAL WATER SERVICE & METER CONNECTION DETAILS

N.T.S.

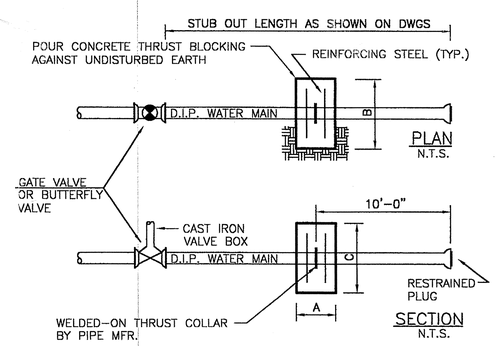

WATER MAIN DIAM.	CONC. COLLAR DIM.			STEEL REINFORCING
	A	B	C	
16"	1'-3"	6'-6"	6'-6"	#8 @ 12" O.C. EW E
12"	1'-2"	5'-3"	5'-3"	#7 @ 12" O.C. EW E
8"	1'-0"	4'-0"	4'-0"	#6 @ 12" O.C. EW E
6"	1'-0"	4'-0"	4'-0"	#6 @ 12" O.C. EW E

TEST PRESSURE: 250 PSI
SOIL BEARING PRESSURE: 3000 PSF

THRUST COLLAR DETAILS

NTS

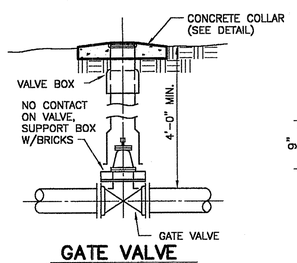

GATE VALVE INSTALLATION DETAIL

N.T.S.

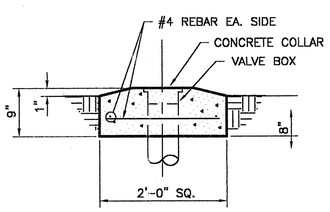

CONCRETE COLLAR FOR VALVE BOX

N.T.S.

NOTE: DETAILS ARE FOR ANY IMPROVEMENTS OR MODIFICATIONS TO THE EXISTING SYSTEM

THIS LINE ——— IS ONE INCH LONG WHEN PLOTTED FULL SCALE

NO.	DATE	DESCRIPTION OF REVISION
0	01-10-05	INITIAL ISSUE

UTILITIES PROTECTION CENTER, INC. CALL BEFORE YOU DIG. 1-800-282-7411

LAKE RABUN BLUFFS
2565 Wellington Drive
Marietta, Georgia 30062

THE ENGINEERING GROUP INCORPORATED

GEORGIA REGISTERED PROFESSIONAL ENGINEER NO. 19243 JAMES P. BLEDSOE 1-10-05

WATERLINE DETAILS

Lake Rabun Bluffs
Water System As-built Drawings

DESIGNED: MPB	CHECKED: MPB	DATE: Jan. 10, 2005	4	0
DRAWN: MPB	JOB NO. 512.0201.01	SCALE: AS SHOWN	SHEET	REV